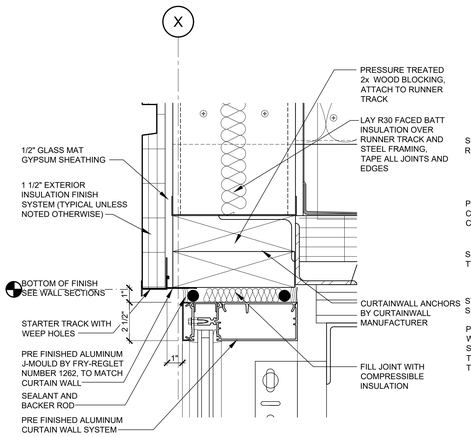

1 A5.3 MULLION HEAD DETAIL
SCALE: 3" = 1'-0"

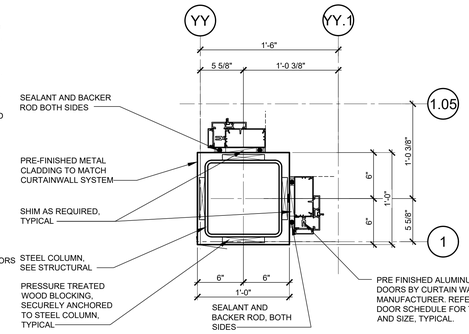

2 A5.3 CORNER COLUMN DETAIL
SCALE: 1 1/2" = 1'-0"

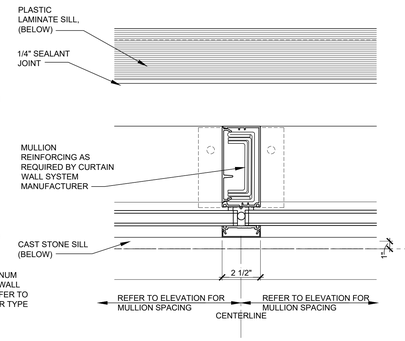

3 A5.3 VERTICAL MULLION DETAIL
SCALE: 3" = 1'-0"

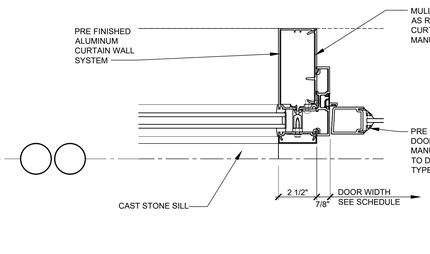

4 A5.3 MULLION DOOR JAMB DETAIL
SCALE: 3" = 1'-0"

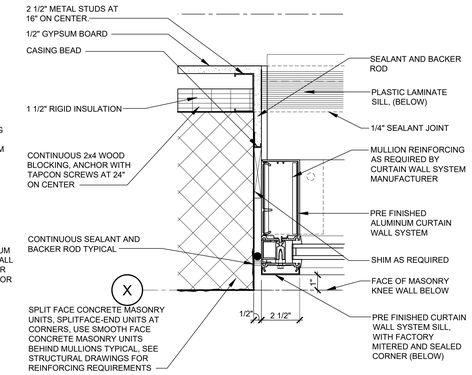

5 A5.3 MULLION JAMB DETAIL
SCALE: 3" = 1'-0"

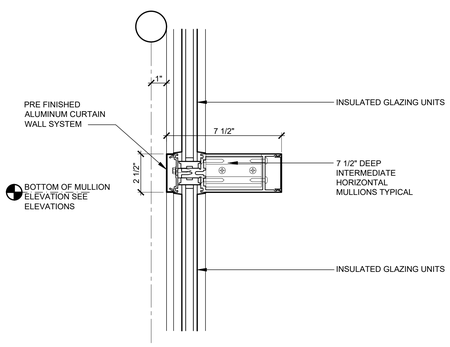

6 A5.3 HORIZONTAL MULLION DETAIL
SCALE: 3" = 1'-0"

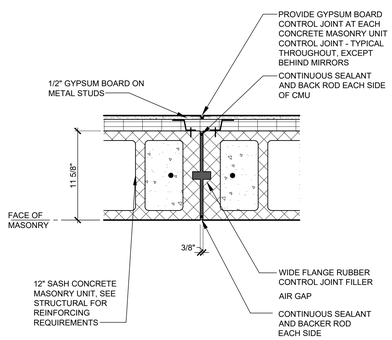

7 A5.3 CONTROL JOINT DETAIL
SCALE: 1 1/2" = 1'-0"

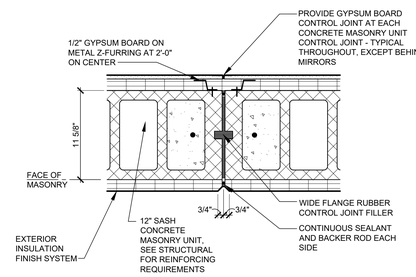

8 A5.3 CONTROL JOINT DETAIL
SCALE: 1 1/2" = 1'-0"

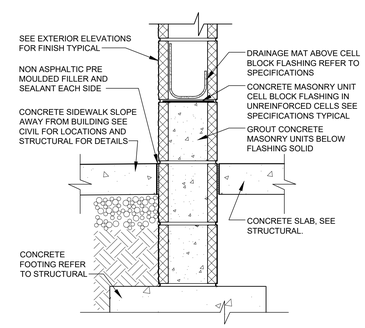

9 A5.3 FLASHING SECTION
SCALE: 1 1/2" = 1'-0"

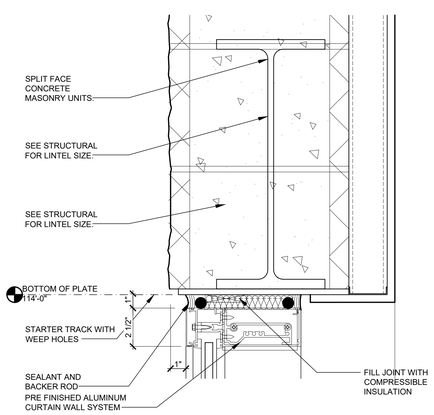

10 A5.3 MULLION HEAD DETAIL
SCALE: 3" = 1'-0"

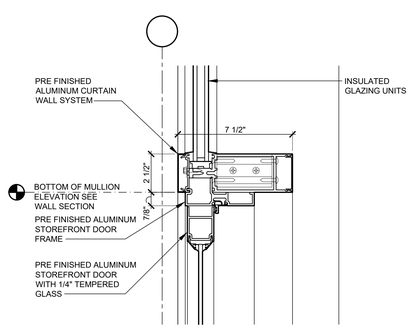

11 A5.3 MULLION DOOR HEAD DETAIL
SCALE: 3" = 1'-0"

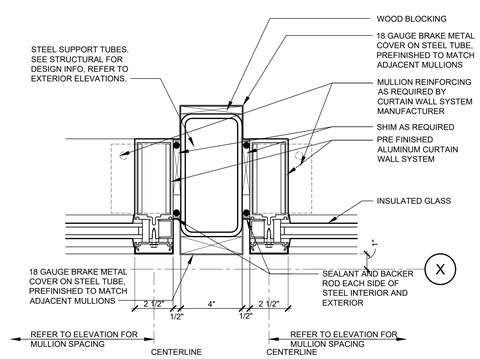

12 A5.3 MULLION STEEL INTERSECTION
SCALE: 3" = 1'-0"

CASCO
12 Sunnen Drive, Suite 100, St. Louis, MO 63143 T: 314.821.1100

ROOMS TO GO
PATIO ADDITION
2832 SW COLLEGE ROAD
OCALA, FLORIDA 34474

CONSTR. DOC. & REVISIONS

No.	Description	Date

PROFESSIONAL OF RECORD
JAMES A. SCHMITT
License NO. AR95329
Expiration Date 02/28/23

Drawn By/Checked By:	MTT/MSB
Project Number	2100630
Owner & Permit Date	09/21/21
Bid Date	04/20/22

DETAILS

A5.3